SP Series Quick Product Introduction

Pure Sine Wave Inverter

Scan QR Code to view the User Manual

IMPORTANT: Please must read the Installation and Maintenance Instructions Before Connecting to the Supply.
Please download and read the user manual from COTEK website or QR code before starting to use the SP Inverter.

	SP-700	SP-1000	SP-1500	SP-2000	SP-3000	SP-4000
Output						
Rated Power	700 VA	1000 VA	1500 VA	2000 VA	3000 VA	4000 VA
Surge Power (Max. 1 Sec)	>1050VA ~ 1400VA (151% ~ 200%)	>1500VA ~ 2000VA (151% ~ 200%)	>2250VA ~ 3000VA (151% ~ 200%)	>3000VA ~ 4000VA (151% ~ 200%)	>3450VA ~ 6000VA (116% ~ 200%)	>4600VA ~ 8000VA (116% ~ 200%)
Surge Power (Max. 3 Sec)	>810VA ~ 1050VA (116% ~ 150%)	>1150VA ~ 1500VA (116% ~ 150%)	>1725VA ~ 2250VA (116% ~ 150%)	>2300VA ~ 3000VA (116% ~ 150%)		
Maximum Output Power (1 Min)	>700VA ~ 810VA (100% ~ 115%)	>1000VA ~ 1150VA (100% ~ 115%)	>1500VA ~ 1730VA (100% ~ 115%)	>2000VA ~ 2300VA (100% ~ 115%)	>3000VA ~ 3450VA (100% ~ 115%)	>4000VA ~ 4600VA (100% ~ 115%)
Frequency	50 / 60 Hz ± 0.5% (Dip Switch Selectable)					
Protection						
Output Overload & Short	Shutdown output voltage, restart to recovery					
Input Protection	Over / Under Voltage, Reverse Polarity (Internal Fuse)					
Over Temperature	Heat sink temperature over 80°C ± 5°C, shutdown output voltage, recover automatically after heat sink temperature goes down to 60°C ± 5°C					
DC input Reverse Polarity	By Fuse					
Environment						
Working Temp.	-20°C ~ 40°C, (-40W/°C, 41~60°C)					
Storage Temp.	-30°C ~ 70°C					
Storage Temp. & Humidity	10 ~ 95 % RH non-condensing					
Control & Signal						
Accessory (Optional)	Remote Control ： CR-8 / CR-16A; Transfer Switch ： TR-40					
LED Indicator	Input voltage level, output load level and faulty status					
Dry Contact Terminal	By relay					
Remote Control	6-port green terminal Terminal					
Control & Signal						
Dimension (WxHxD)	200x83x330 mm / 7.87x3.27x12.99 inch	200x83x372 mm / 7.87x3.27x14.65 inch	248x83x421 mm / 9.76x3.27x16.57 inch	248x83x443 mm / 9.76x3.27x17.44 inch	255x158x442 mm / 10.04x6.22x17.40 inch	255x158x462 mm / 10.04x6.22x18.19 inch
Packing	2.6kg; 6pcs / 16.6kg / 3.59 CUFT	3.26kg; 4pcs / 14kg / 2.65 CUFT	4.42kg; 4pcs / 22.68kg / 3.54 CUFT	5.24kg; 4pcs / 21.96kg / 3.58 CUFT	8.2kg; 2pcs / 17.4kg / 3.05 CUFT	10kg; 2pcs / 21kg / 3.05 CUFT
Cooling	Temperature & load controlled cooling fan					
Application	Home and office appliances, portable power equipment, vehicle, yacht and off-grid solar power					

	SP Series - 112	SP Series - 124	SP Series - 148	SP Series - 212	SP Series - 224	SP Series - 248
Output						
AC Voltage	100 / 110 / 115 / 120 VAC (Dip Switch Selectable)			200 / 220 / 230 / 240 VAC (Dip Switch Selectable)		
AC Regulation	± 5%			± 3%		
Output Waveform	Pure Sine Wave (THD<5% @ Normal Load)			Pure Sine Wave (THD<3% @ Normal Load)		
Input						
DC Voltage	12VDC	24VDC	48VDC	12VDC	24VDC	48VDC
Voltage Range	10.5~16.5VDC	21~33VDC	42~66VDC	10.5~16.5VDC	21~33VDC	42~66VDC
No Load Current	≦1.5A@12VDC	≦0.8A@24VDC	≦0.5A@48VDC	≦1.5A@12VDC	≦0.8A@24VDC	≦0.5A@48VDC
Power Saving Mode	<0.1A@12VDC	<0.06A@24VDC	<0.05A@48VDC	<0.1A@12VDC	<0.06A@24VDC	<0.05A@48VDC
Protection						
Efficiency (Max.)	92%	93%	94%	94%	94%	95%
Input Under-Voltage Protection	10.5 ± 0.3VDC	21 ± 0.5VDC	42 ± 1.0VDC	10.5 ± 0.3VDC	21 ± 0.5VDC	42 ± 1.0VDC
Input Under-Voltage Recovery	12.5 ± 0.3VDC	25 ± 0.5VDC	50 ± 1.0VDC	12.5 ± 0.3VDC	25 ± 0.5VDC	50 ± 1.0VDC
Input Over-Voltage Protection	16.5 ± 0.3VDC	33 ± 0.5VDC	66 ± 1.0VDC	16.5 ± 0.3VDC	33 ± 0.5VDC	66 ± 1.0VDC
Input Over-Voltage Recovery	14.5 ± 0.3VDC	29 ± 0.5VDC	58 ± 1.0VDC	14.5 ± 0.3VDC	29 ± 0.5VDC	58 ± 1.0VDC
Safety & EMC						
Safety Standards	UL 458 (UL only for GFCI & Hard Wire)		----	EN 60950-1		
EMC Standards	FCC class B*			EN 55032 class B* ; EN 55024 EN 61000-3-2, -3-3 EN 61000-4-2, 3, 4, 5, 6, 8, 11		
E-mark	----			CISPR 25; ISO 7637-2		

*Warning ： SP-2000/3000/4000 is a class A product. In a domestic environment this product may cause radio interference in which case the user may be required to take adequate measures.

Socket Types

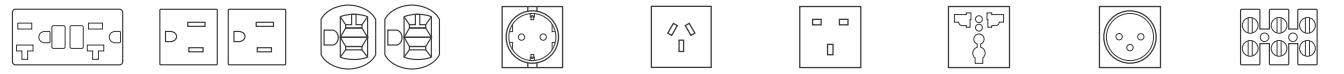

North America (GFCI)	North America (NEMA 5-15R)	North America (NEMA 5-20R)	Continental European	Australia / New Zealand	United Kingdom	Universal	France Connector	Hard Wire

Product Appearance

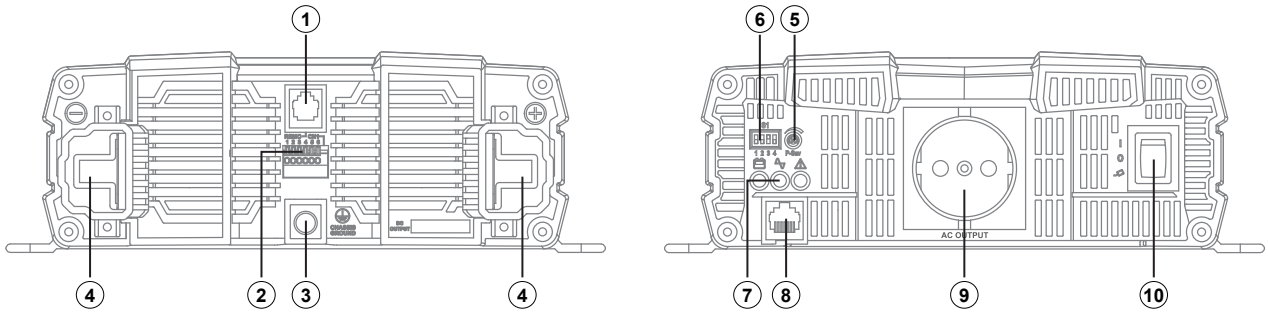

① Remote port (RJ-11)
② Remote control green terminal
③ Chassis ground
④ DC input connector
⑤ Saving power adjustment
⑥ Function switch
⑦ Function LED
⑧ TRC port (RJ-45)
⑨ AC output socket
⑩ Main switch

Product Installation

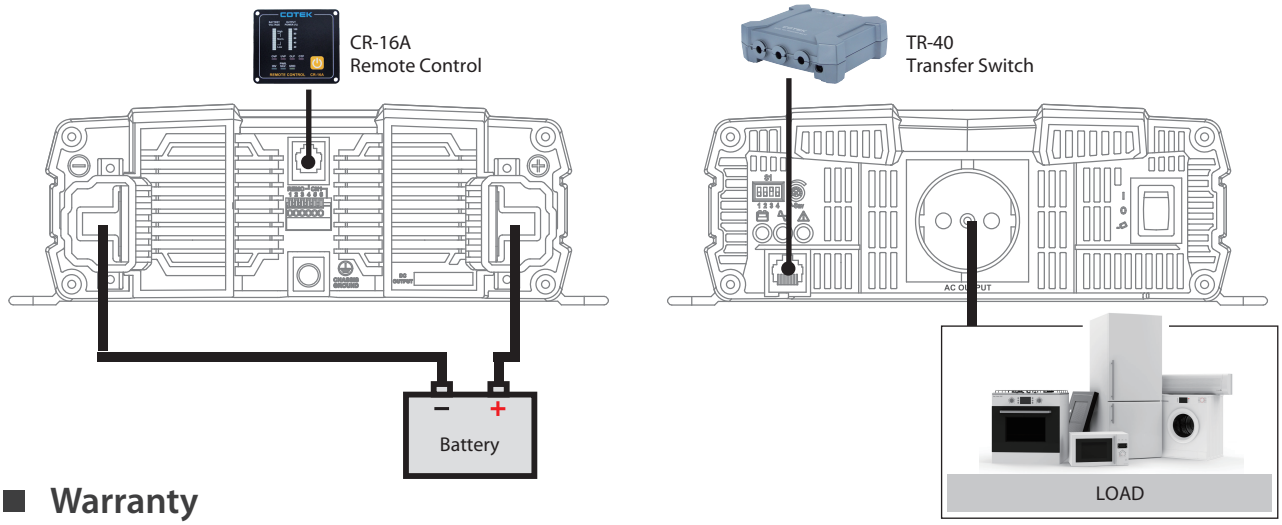

Warranty

Warning!

Do not open or disassemble the Inverter. Attempting to do so may cause risk of electrical shock or fire.

We guarantee this product against defects in materials and workmanship for a period of 24 months from the date of purchase.
In case you need to repair or replace any defective power inverters, please contact COTEK local distributor.
This warranty will be considered void if the unit has been misused, altered, or accidentally damaged. COTEK is not liable for anything that occurs as a result of the user's fault.

COTEK
www.cotek.com.tw
No.33, Sec. 2, Renhe Rd., Daxi Dist., Taoyuan City 33548, Taiwan
Phone：+886-3-3891999 FAX：+886-3-3802333